PRELIMINARY PRELIMINARY PRELIMINARY PRELIMINARY PRELIMINARY PRELIMINARY PRELIMINARY PRELIMINARY

36" Electric Cooktop

- Radiant Cooktop with 5 Elements
- Steady Heat Elements
- Dual 12 1/4" / 9 7/8" Element
- Warming Function
- LED Direct Touch Controls (Front)

IMAGE NOT FINAL

COLOR AVAILABILITY
CBEW3613BE - Black Ceran Glass w/Grey Pattern

COOKTOP FEATURES	
Cooktop Type	Electric
Number of Elements	5
Element Size / Wattage	
Left Front	6 3/8" – 1,200W
Left Rear	6 3/8" – 1,200W
Center	Dual 12 1/4" / 9 7/8" – 3,000W / 2,500W
Right Front	Dual 9 7/8" / 6 3/8" – 2,500W / 1,200W
Right Rear	—
Bridge Element	No
Hot Surface LED Indicator	Yes
Auto Shut Off	No
Warm Function	Yes
Power Control	Steady Heat
CONTROLS	
Cooktop Control Type	LED Direct Touch Controls (Front)
Control Lock	Yes
CONVENIENCE	
ADA Compliant	Yes

SMART FEATURES	
Wi-Fi Enabled	Yes
ThinQ® Technology	Yes
ThinQ UP™	Yes
SmartDiagnosis™	No
FINISHES AND APPEARANCE	
Cooktop Surface	Black Ceran Glass w/Grey Pattern
Cooktop Frame / Trim	N/A
TECHNICAL SPECS	
ENERGY STAR® Certified	Yes
Required Power Supply	240 / 208 V, 60 Hz, 3-Wire or 4-Wire
Minimum Circuit Rating	50 Amp
kW Rating at 208V	9.1 kW
kW Rating at 240V	6.8 kW
Power Cord / Cable	Not Included
Power Cable Location	Right Rear
DIMENSIONS / CLEARANCES / WEIGHTS	
Product Dimensions (W x H x D)	36 5/8" x 4 1/8" x 21 1/16"
Cutout Dimensions (W x H x D)	33 7/8" x 5 7/8" x 19 1/8"
Carton Dimensions (W x H x D)	33 7/8" x 5 3/8" x 24 1/4"
Approx. Weight (Product / Carton)	TBD lbs. / TBD lbs.
LIMITED WARRANTY	
Parts and Labor	1 Year

PRELIMINARY PRELIMINARY PRELIMINARY PRELIMINARY PRELIMINARY PRELIMINARY PRELIMINARY

DIMENSIONS / CLEARANCES

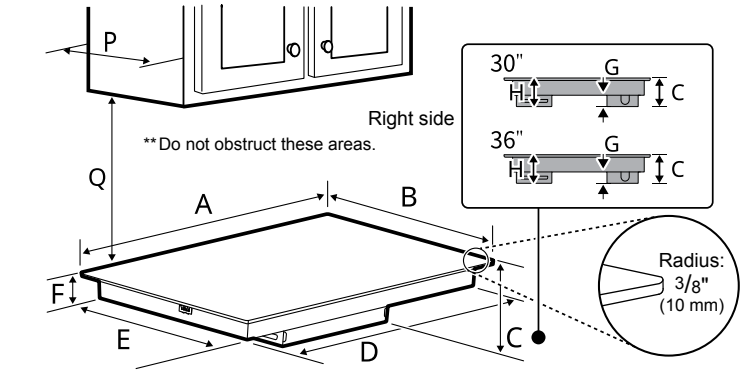

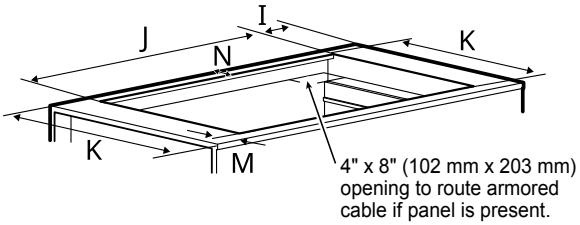

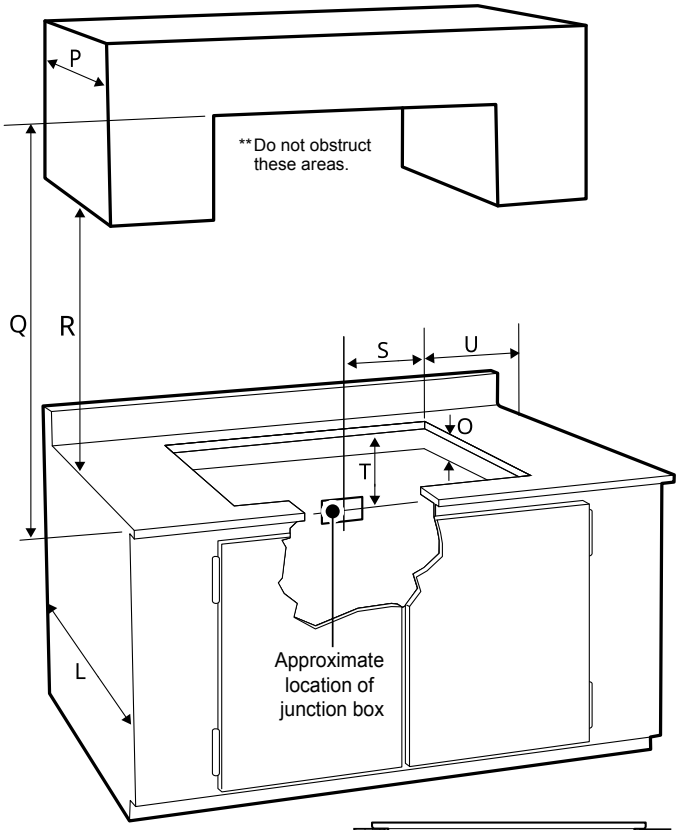

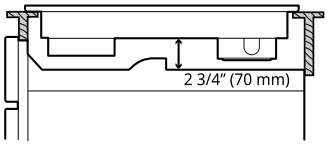

DIMENSIONS / CLEARANCES		
A	Width of upper plate	36 5/8" (930 mm)
B	Depth of upper plate	21 1/16" (534 mm)
C	Distance from bottom of upper plate to bottom of conduit and terminal block enclosure	3 7/8" (98.4 mm)
D	Width of cooktop base	33 1/2" (851 mm)
E	Depth of cooktop base	18 13/16" (477 mm)
F	Distance from bottom of upper plate to bottom of cooktop base	2 1/2" (64 mm)
G	Height of conduit and terminal block enclosure	1 7/16" (37 mm)
H	Height of base cover	4" (101 mm)
I	Distance from side edge of cutout to side of counter	≥ 1 1/8" (28 mm)
J	Width of cutout	≥ 33 7/8" (860 mm) ≤ 33 15/16" (863 mm)
K	Depth of cutout	≥ 19 1/8" (486 mm) ≤ 19 3/16" (488 mm)
L	Depth of bottom cabinets	23 3/8" (593 mm)
M	Distance from front of counter to front edge of cutout	≥ 2 3/16" (55 mm)
N	Distance from rear edge of cutout to nearest combustible surface	≥ 2 1/16" (52 mm)
O	Height below cutout (space is needed under cooktop for optimum performance.)	≥ 5 3/4" (146 mm)
P	Depth of overhead cabinets	≤ 13" (330 mm)
Q	Clearance from top of cooking surface to bottom of overhead cabinets	≥ 36" (914 mm)
R	Clearance from countertop to bottom of adjacent cabinets	≥ 18" (457 mm)
S	Junction box (approx. location)	12" (305 mm)
T	Junction box (approx. location)	10" (254 mm)
U	Distance from edge of cooktop to nearest combustible wall (either side of unit)	≥ 2" (50 mm)

INSTALLATION NOTES

- Allow 2" (50 mm) space below the armored cable opening to clear the electric cable and allow space for installation of the junction box on the wall at the back of the cooktop.
- Thickness of glass: 3/16" (4 mm)
- Make sure the cabinets and wall coverings around the cooktop can withstand the temperatures up to 200˚F generated by the cooktop.
- To eliminate the risk of burns or fire by reaching over heated surfaces, cabinet storage space located above the cooktop should be avoided. If cabinet storage is provided, risk can be reduced by installing a range hood that projects horizontally a minimum of 5" (127 mm) beyond the face of the cabinets.
- It is very important to keep 2 3/4" (70 mm) distance between the cooktop and the oven installed below it.

LG Business Solutions

© 2025 LG Electronics USA, Inc. All rights reserved. "LG Life's Good" is a registered trademark of LG Corp. All other product and brand names are trademarks or registered trademarks of their respective owners. Design, features and specifications are subject to change without notice. Non-metric weights and measurements are approximate. Some features may require Internet access. Content and services may vary by product and are subject to change without notice.